VANDAL RESISTANT
BACK-LIT WEATHERPROOF
RFID ACCESS CONTROL KEYPAD

WITH WIEGAND OUTPUT & APO DATA I/O

DK-2882
Programming & Installation Manual

**FOR ELECTRIC LOCK, INTER-LOCK
AND SECURITY SYSTEM INSTALLATIONS**

AEI PROTECT-ON SYSTEMS LIMITED
www.apo-hk.com

VERSION: 08/2012

TABLE OF CONTENTS

INTRODUCTION 4
FEATURES 4
SPECIFICATIONS 5
INSTALLATION 6
Precautions 6
Package Contents 6
CONNECTION TERMINALS 7
The On-Board LED Indicators 9
The Pacifier Tones & The LED Signals 9
The Jumper for Back-Lit Selection 9
FEATURE PROGRAMMING & OPERATION INSTRUCTIONS 10
Set System in Programming Mode with The Master Code 10
Direct Access to Programming Mode with The “DAP” Code – 8 0 8 0 10
Refresh The System with The “Refreshing Code” --- 9 9 9 9 11
The Default Values of The Keypad 11
KEYPAD PROGRAMMING MAKE SIMPLE – For General Users 12
FEATURE PROGRAMMING -- KEY IN AND STORE THE DESIRED VALUES 14
Programming Criteria for Codes 14
Record A Master Code 15
Record A Super User PIN 16
Operation And Functions of The Super User PIN 16
Record The Common User PINs for Output 1, 2 & 3 16
Record-Delete PINs or Cards for Output 1, 2, & 3 17
Examples – Programming And Operation 18
Visitor Codes (For Output 1 Only) 20
Duress Codes (For Outputs 1, 2 & 3) 21
The Operation And Function of The Duress Code 22
Configuration of The Output Modes for Output 1, 2 And 3 23
Personal Safety And System Lock-Out 23
User PIN Entry Mode 24
Pacifier Tones On-Off Selection 24
Output Operation Announcer 24
Status LED Flashing On-Off during Standby 25
Door Forced Open Warning & Timing 25
Door Propped-Up Warning & The Delay Time 25
Intelligent Egress Button – An Unique Feature of A Contemporary Keypad 26
Where And Why “Going Out” Needs Attention 26
Egress Delay , Warning And Alarm 27
Configurations of The Egress Warning And Alarm 27

APPENDIX

- **DRY CONTACT**
  A dry contact means that no electricity is connected to it. It is prepared for free connections. The Relay Output contacts provided in this keypad system are dry contacts.

- **N.C.**
  Normally Closed, the contact is closed circuit at normal status. It is open circuit when active.

- **N.O.**
  Normally Open, the contact is open circuit at normal status. It is closed circuit when active.

- **TRANSISTOR OPEN COLLECTOR OUTPUT**
  An open collector output is equivalent to a Normally Open (N.O.) contact referring to ground similar to a relay contact referring to ground. The transistor is normally OFF, and its output switches to ground (–) when active. The open collector can only provide switching function for small power but it is usually good enough for controlling of an alarm system. The Duress, Interlock and Key Active/Alarm Outputs of the keypad are open collector outputs.

OPEN COLLECTOR OUTPUT ---- Output switches to ground when activated

EQUIVALENT

N.O. CONTACT OUTPUT ---- Output switches to ground when activated

(F) OUTPUT 2

(i) Shunting an N.C. Zone

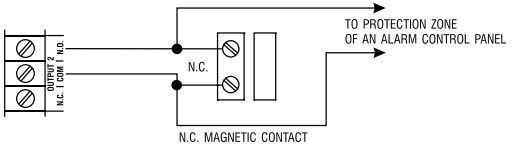

- Use the Normally Open (N.O.) output contact to shunt a Normally Closed (N.C.) protection zone of an alarm system.
- Set output contact to Start / Stop Mode (Programming Option 52, Output Mode=0).

(ii) Alarm System Arm-Disarm Control

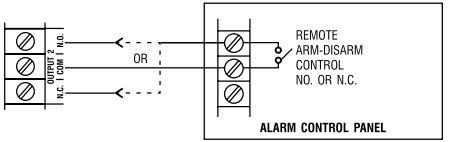

- Use the (N.O.) or (N.C.) output contact to make arm-disarm control of an alarm system.
- Consult your alarm control panel manual for the appropriate output contact to be used in arm-disarm control.
- Usually set output 2 to Momentary mode (Programming Option 521, Location 52, Output Mode=1) for multi station systems and Start / Stop mode (Programming Option 520, Location 52, Output Mode=0) for single station systems.

Door Opening Alarm & Timer 28
Close The Programming Mode 28
THE WIRE HARNESS FOR "WIEGAND DATA OUTPUT" & "APO DATA I/O" 29
Split-decoded Keypad System 29
The Wire Harness 29
The Operation Modes and The Wiegand Output 30
Wiegand Output at Keypad Operation Mode 30
TIMING & ELECTRICAL MANNER OF THE WIEGAND DATA OUTPUT 31
Diagram of The Wiegand Protocol Timing and Its Electrical Manner 31
THE 26 BIT WIEGAND DATA OUTPUT READING FROM THE EM CARDS 32
Example 1: Wiegand Output of Reading An EM Card 32
THE 34 BIT WIEGAND DATA OUTPUT READING FROM THE USER PINS 33
Example 2 : Wiegand Output from PIN / Code Entry 33
THE APO DATA I/O PORT -- FOR SETTING UP A SPLIT-DECODED KEYPAD 34
The Optional DA-2800 Controller --- Introduction 34
PROGRAMMING SUMMARY CHART 35
APPLICATION EXAMPLES 37
Basic Wirings of A Stand Alone Door Lock 37
Basic Wirings of A Stand Alone Door Lock with Inhibit Authorization Code 38
Basic Wirings of An Inter-Lock System Using Two Keypads 39
APPLICATION HINTS FOR THE AUXILIARY TERMINALS 40
APPENDIX 43

INTRODUCTION

The DK-2882 is a self-contained three relay outputs, vandal resistant and weatherproof keypad. It combines the functions of digital keypad and proximity EM card reader in one unit.

The DK-2882 can work independently as a stand alone keypad or works together with an optional “APO access controller” to form a high security split-decoded keypad system. It is also a card reader providing of 26 bits Wiegand data output from reading of an EM Card and 34 bits data output from the entry of an PIN/code. The Wiegand data can be used by consultants and end users when setting product design or system installation criteria.

The keypad comes with plenty of functions for owner’s selection via programming. Owners can take them freely to tailor the desired features for their systems.

It is an ideal keypad mainly for Door Strike and Alarm Arm-disarm control. It is also a programmable industrial timer (with the timing of 1 second to over 24 hours) for Automatic Operator systems.

The DK-2882 line of keypads have four versions. Versions A and B are designed for surface mounting on wall or fitting on a standard gooseneck post. The C and D are the flush mount versions. They are designed to flush mount on solid wall or hollow wooden wall with its back box.

DK-2882A – Output Relays for Output 1, 2 and 3 (Surface / Gooseneck Mount Version)
DK-2882B – Output Relays for Output 1, 2 and Door Bell (Surface / Gooseneck Mount Version)
DK-2882C – Output Relays for Output 1, 2 and 3 (Flush Mount Version)
DK-2882D – Output Relays for Output 1, 2 and Door Bell (Flush Mount Version)

FEATURES

- A member of the Tri-Tech series keypads compatible with the optional APO Access Controller
- Indoor or outdoor installation
- Stand Alone or Inter-lock system built-in with all the required control logics
- Controls “Going in” with PIN and/or Card; and “Going out” with programmable egress button
- Durable steel housing for surface or gooseneck mounting (DK-2882A / DK-2882B)
- Plastic back box for flush mounting on solid or hollow wooden wall (DK-2882C / DK-2882D)
- Built-in Tamper Switch
- Heavy duty 1.5mm stainless steel faceplate
- Die-casting metal back-lit keyboard with dual brightness levels
- Vandal resistant and weatherproof (IP-66)
- Data I/O port for Up-grading the system to Split-decoded operation with the optional “APO Controller”
- 26 bit standard Wiegand data output from reading of EM cards
- 34 bit Wiegand data output on PIN / code entry
- Three outputs controlled by independent groups of codes / PINs / Cards
- Programmable Timers for Door Strike, Alarm Arm-disarm Control or Industrial Automatic Operators

THE OPTIONAL CONTROLLERS FOR SPLIT-DECODED OPERATION

DA-2800 -- Full Feature Decoder + RF Remote Control

DA-2801 -- Full Feature Decoder

(D) KEY ACTIVE -- SET THE "K OR A" JUMPER TO "K"

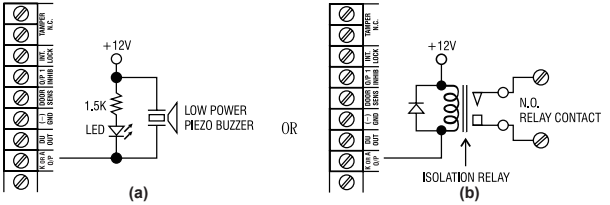

The Key Active Output switches to (–) ground for 10 seconds whenever a key is touched. You may use it to turn ON an LED lamp and /or a small buzzer to notify a guard; or to energize a relay to switch ON lights or trigger an CCTV Camera to start recording.

- Make sure that the relay for switching ON lights has high enough isolation between high voltage and low voltage to prevent damage of the keypad.
- Only one connection option is recommended. Make sure the sink current does not exceed the maximum rating of 100mA.
- External power supply and isolation relay are strictly necessary in driving high power device, such as lights.

(E) DURESS OUTPUT

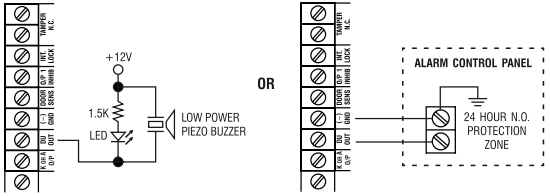

The Duress Output switches to (–) ground when duress code is entered. You may use it to turn ON an LED lamp and/ or a small buzzer to notify a guard; or connect it to a 24 hour Normally Open protection zone of an alarm system.

- Only one connection option is recommended. Make sure that the sink current does not exceed the maximum rating of 100mA.

APPLICATION HINTS FOR THE AUXILIARY TERMINALS

(A) TAMPER N.C.

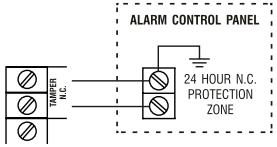

The tamper switch is Normally Closed while the keypad is secured on gang box. It is open when the keypad is removed from the gang box. To prevent sabotage, connect these terminals in series with a 24 hour N.C. protection zone of an alarm system if required.

(B) DOOR SENS

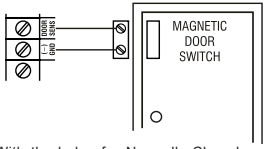

With the help of a Normally Closed door position sensor (usually a magnetic door switch) on the door to set up the following functions:

a) **Door Auto Relock** -- The system will immediately relock the door after a valid access has been gained to prevent "tailgate" entries.

b) **Door Forced-open Alarm** -- The keypad will generate alarm instantly if the door is forced to open. Enable the function at Location 80.

c) **Door Propped-up Alarm** -- The keypad will generate alarm if the door is left open longer than the pre-set delay time. Enable the function at Location 81.

d) **Inter-lock Control** -- When the door is open, the interlock output of the keypad will give a (–) command to stop the other keypad in an inter-lock system.

e) **Door Opening Alarm** -- Door Opening Alarm is designed for the emergency door only. It is always given when the door is opened unless a valid user code or card is used prior to the door is opened. Enable the function at Location 91.

(C) ALARM OUTPUT -- SET THE "K OR A" JUMPER TO "A"

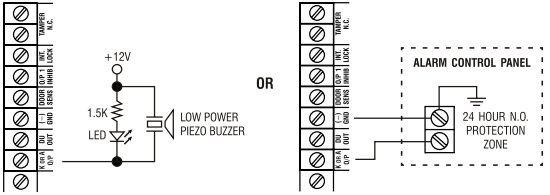

The Alarm Output switches to (–) ground in door forced to open or the door open after Egress Delay. You may use it to turn ON an LED lamp and/ or a small buzzer to notify a guard; or connect it to a 24 hour Normally Open protection zone of an alarm system. See Location 80 and Location 91 for more information about these functions.

- Only one connection option is recommended. Make sure that the sink current does not exceed the maximum rating of 100mA.

SPECIFICATIONS

- **Operating Voltage:**
  12V-24V DC, Auto adjusting
- **Operating Current:**
  75mA (quiescent) to 145mA (three relays active)
- **Operation Temperature:**
  -20°C to +70°C
- **Environmental Humidity:**
  5-95% relative humidity non-condensing
- **Working Environment & Ingress Protection:**
  All weather, IP-66
- **Number of Users:**
  Output 1 – 1,000 (PINs and/or Cards) + 50 Duress Codes
  Output 2 – 100 (PINs and/or Cards) + 10 Duress Codes
  Output 3 – 100 (PINs and/or Cards) + 10 Duress Codes
- **Proximity Card:**
  Standard EM Card or Keyfob, 125Khz
- **Number of Visitor Codes:**
  50, programmable for one time or with the time limit
- **Timings for Code Entry and Card Reading:**
  10 seconds waiting for next digit entry
  30 seconds waiting for code entry after card reading
- **The Timers:**
  Three 1-99,999 Seconds (Over 24 Hours possible) Independent Programmable Timers for O/P 1, 2 & 3
- **Egress Button:**
  Programmable for Instant, Delay with Warning and/or Alarm
  Momentary or Holding Contact for the Exit Delay
- **Input Sensing Terminals:**
  a) Door position, **b)** Egress, **c)** O/P 1 inhibit
- **Output Control Terminals:**
  Transistor Open Collector 24VDC/100mA sink Max for the following outputs
  a) Duress, **b)** Alarm, **c)** Key Active, **d)** Output 3 (Door Bell version only), **e)** Inter-lock
- **Output Contact Ratings:**
  Output Relay 1 – N.C. & N.O. dry contacts, 5A/24VDC Max.
  Output Relay 2 – N.C. & N.O. dry contacts, 1A/24VDC Max.
  Output Relay 3 – N.C. & N.O. dry contacts, 1A/24VDC Max. (N.O. contact only for Door Bell version)
  Tamper Switch – N.C. dry contact, 50mA/24VDC Max.
- **Dimensions:**
  DK-2882A / DK-2882B – 156(H) X 103(W) X 50/70(D)mm
  DK-2882C / DK-2882D – 151(H) X 97.5(W) X 42(D)mm
- **Weight:**
  DK-2882A / DK-2882B – 1.03Kg net
  DK-2882C / DK-2882D – 460g net
- **Housing:**
  DK-2882A / DK-2882B – Anodized steel, powder paint coating outer box & plastic inner box
  DK-2882C / DK-2882D – Plastic back box
- **Faceplate Material:**
  1.5mm stainless steel

Specifications are subject to change for modification without notice

INSTALLATION

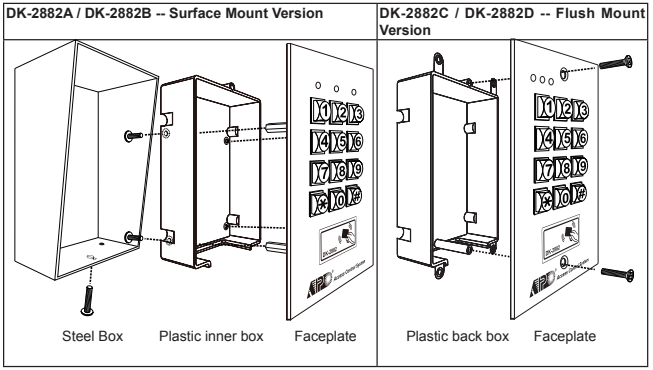

PRECAUTIONS

1) Prevent Interference:

The EM Card reader is working at the frequency of 125Khz. Installation precautions are necessary.

i) Make sure the location for installation has no strong low frequency electro-magnetic wave signals. Especially in the range of 100-200Khz

ii) If there is more than one keypads with the same operation frequency installed closely in the same location, make sure that they are at least 60cm (2ft) apart from each other to prevention interference.

2) Prevent Accidental Short Circuit:

In the previous experience, most of the damages caused in the installation are accidental touching of the components on circuit board with the wires carrying power. Please be patient to study the manual to become familiar with the specifications of the system before starting the installations.

i) Do not apply power to the system while it is in installation.

ii) Check carefully all the wirings are correct before applying power to the system for testing.

PACKAGE CONTENTS

- One DK-2882 Keypad
- Two EM cards or keyfobs
- One pack of Mounting Screws
- One Centre Pin Torx Screw Wrench
- One Wire Harness (Six wires)
- One Programming & Installation Manual

3) BASIC WIRINGS OF AN INTER-LOCK SYSTEM USING TWO KEYPADS

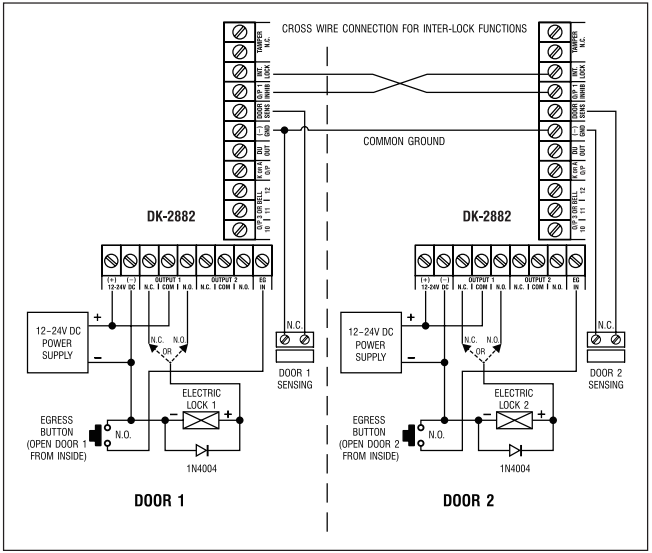

An inter-lock system needs two door controllers. This application example uses two DK-2882 with simple cross wire connection on their "Output 1 Inhibit" and "Inter-lock Control Output" terminals. It is necessary to link up the "(–) GND" terminals of the two keypads as common ground to achieve the inter-lock logical functions.

- Use keypad to open the door from outside
- Press egress button to open the door from inside
- Connect the door magnetic sensors on the doors to monitor their positions
- While door 1 is open, then, door 2 is forced to keep close, or vice versa
- Use N.O. Relay output for fail-secure lock; and N.C. output for fail-safe lock
- Please also see the "NOTE" stated in the Application Example (1)

2) BASIC WIRINGS OF A STAND ALONE DOOR LOCK WITH INHIBIT AUTHORIZATION CODE

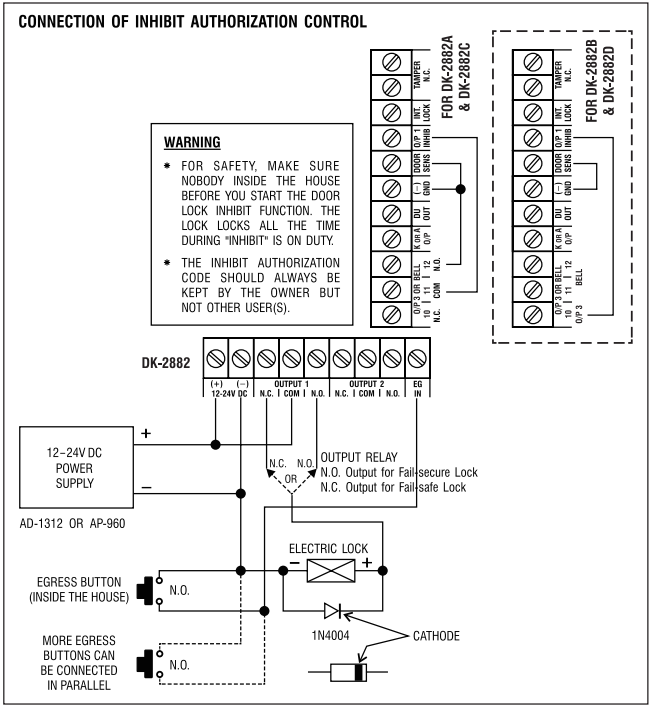

- Use output 3 as authorization control. The owner may key in the user code 3 to stop the operation of the electric lock in the night time or after office hour to prevent unauthorized access.
- Set output 3 in Start / Stop mode (Programming Location 53 Output Mode =0) for ON-OFF control.
- Simply connect the "output 1 inhibit" (O/P 1 INHIB) terminal with output 3 as like the wiring diagram shown. User code 1 is invalid while the "O/P 1 INHIB" terminal is shunted to ground with user code 3.

NOTE:

1) The Inhibit Authorization Control in this example is made up with hardware connection of Output 3 to the "Output 1 Inhibit" terminal. It gives inhibit function to all User PINs and Cards and the Egress Button for Output 1 with the User PIN 3.
2) A software Inhibit function is also available in the keypad.
   It is made up with the SUPER USER PIN # 9.

   The Inhibit function in this way gives to all User PINs and Cards for Output 1 only but not to the Egress Button. Please see Location 02 for the details.

CONNECTION TERMINALS

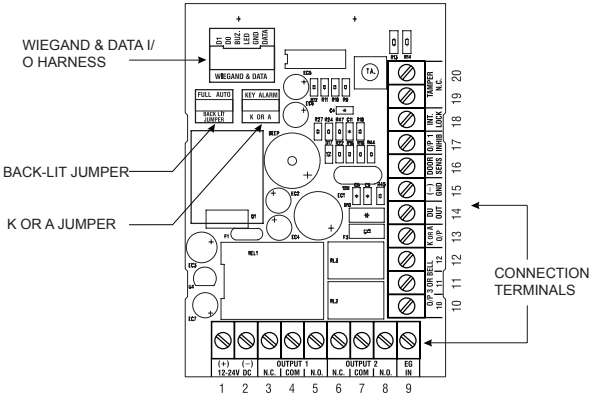

- **1 - 2 : 12-24V DC (Power Input Terminal)**
  Connect to 12-24V DC power supply. The (–) supply and the (–) GND are the common grounding points of the system. The system accepts full input voltage range with no jumper selection.
- **3 - 4 - 5 : OUTPUT 1 (Output Relay 1)**
  5 Amp relay dry contact controlled by the Group 1 User PINs or Cards for Output 1, recommended for door strike. Terminal 3 is Normally Closed (N.C.), terminal 5 is Normally Open (N.O.) and terminal 4 is the common point of the two contacts. Use N.C. output for Fail-safe locking device; and N.O. output for Fail-secure locking device. The relay is programmable for Start/Stop (toggle) mode or Momentary timing mode. See programming Location 51 for the details.
- **6 - 7 - 8 : OUTPUT 2 (Output Relay 2)**
  1 Amp relay dry contact controlled by the Group 2 User PINs or Cards for Output 2, it is an auxiliary output ideally for controlling security system or automatic operator. Terminal 6 is Normally Closed (N.C.), terminal 8 is Normally Open (N.O.) and terminal 7 is the common point of the two contacts. The relay is programmable for Start/Stop (toggle) mode or Momentary timing mode. See programming Location 52 for the details.
- **9 : EG IN (Egress Input)**
  A Normally Open (N.O.) input terminal referring to (–) ground. With the help of connecting a normally opened button to activate Output 1 for door opening in the same manner of using the Group 1 User PINs or Cards.
  Egress button is usually put inside the house near the door. More than one egress buttons can be connected in parallel to this terminal. Leave this terminal open if not used.
  See Programming Locations 90 and 91 for more information about the Egress Button with other features.
- **For DK-2882A & DK-2882C Only* 10 - 11 - 12 : OUTPUT 3 (Output Relay 3)**
  1 Amp relay dry contact controlled by the Group 3 User PINs or Cards for Output 3 in the version "A" & "C" keypads, it is an auxiliary output ideally for controlling security system or automatic operator. Terminal 10 is Normally Closed (N.C.), terminal 12 is Normally Open (N.O.) and terminal 11 is the common point of the two contacts. The relay is programmable for Start/Stop (toggle) mode or Momentary timing mode. See programming Location 53 for the details.

- **For DK-2882B & DK-2882D Only* 10 : OUTPUT 3 (NPN Transistor Open Collector Output)**
  An NPN transistor open collector output is for the version “B” & “D” keypads, which is controlled by the Group 3 User PINs or Cards for Output 3. It has the maximum power rating of 24VDC/100mA sink. It is equivalent to an N.O. (Normally Open) terminal referring to ground. It can be used to drive small power device, such as a relay or a low power control point of other equipment. This output point is programmable for Start/Stop (toggle) mode or Momentary timing mode. See programming Location 53 for the details.

- **For DK-2882B & DK-2882D Only* 11 - 12 : DOOR BELL (Output Relay Contact for Door Bell)**
  Door Bell output is for the version “B” & “D” only. It is a Normally Open (N.O.) relay dry contact with maximum rating of 24VDC/1Amp. It is prepared as a triggering contact of a low voltage door chime. The contact point keeps close as long as the bell button on the keypad is pressed.

- **13 : “K” OR “A” O/P (Keypad Active Output or Alarm Output)**
  An NPN transistor open collector output with the maximum power rating of 24VDC/100mA sink. It is equivalent to an N.O. (Normally Open) terminal referring to ground. It can be used to drive small power device, such as a relay or a low power control point for other equipment. This output point is selectable to give Keypad Active Output or Alarm Output via the **Selection of the “K or A” jumper.**

  a) Keypad Active Output (“K”) --- It switches to (–) ground for 10 seconds on each key touch. It can be used to turn on light, CCTV camera, or buzzer to notify a guard. See Application Hints for more information.
  b) Alarm Output (“A”) --- It switches to (–) ground while Alarm occurs in order to trigger external alarm to give notification at remote location.

- **14 : DU OUT (Duress Output)**
  An NPN transistor open collector output with the maximum power rating of 24VDC/100mA sink. It is equivalent to an N.O. (Normally Open) terminal switching to (–) ground after the Duress Code is entered. Use it to trigger an alarm zone of a security system, or turn on a buzzer to notify a guard.

- **15 : (–) GND (Common Ground)**
  A grounding point of the keypad that is common to terminal 2.

- **16 : DOOR SENS N.C. (Door Position Sensing Input -- Normally Close)**
  A Normally Closed (N.C.) sensing point referring to (–) ground, with the help of a normally closed magnetic contact monitors the open or close status of the door. It initiates the following functions for the system. Connect it with jumper to (–) Ground if not used.
  a) Door Auto Re-lock
  The system immediately re-locks the door after it is re-closed before the end of the programmed time for output 1. It prevents unwanted “tailgate” entry.
  b) Door Forced Open Warning
  The keypad generates “door forced open” warning and alarm instantly once the door is forced to open without a valid user PIN, Card or egress button. The warning lasts as long as the time programmed (1–999 sec). It can be stopped with an User PIN or card for output 1 at anytime. See programming Location 80 for the details.
  c) Door Propped-up Warning
  The keypad generates propped-up warning beeps (does not activates alarm output) while the door is left open longer than the allowable time programmed. The warning will last as long as the door is open until re-closed. See programming Location 81 for the details.
  d) Inter-lock Control
  The inter-lock control output always goes to (–) while the door is open, which gives signal to disable the other keypad in the inter-lock system. See the Inter-lock terminal description for more information.
  e) Door Opening Alarm
  Door Opening Alarm is designed for the emergency door only. It is always given when the door is opened unless a valid user code or card is used prior to the door is opened. See programming Location 91 for the details.

- **17 : O/P 1 INHIBIT N.O. (Output 1 Inhibit Control Input – Normally Open)**
  A Normally Open (N.O.) sensing input point for controlling the Output 1, with this terminal connecting to (–) ground, the **Egress Button, the group of User PINs and Cards for Output 1 are all disabled**. It is prepared mainly for the cross wire connection with the “Inter-lock O/P” point on the other keypad in an Inter-lock system.

NOTE: The inhibit function does not govern the Duress Codes and the Super User Codes. They are always valid.

APPLICATION EXAMPLES

1) BASIC WIRINGS OF A STAND ALONE DOOR LOCK

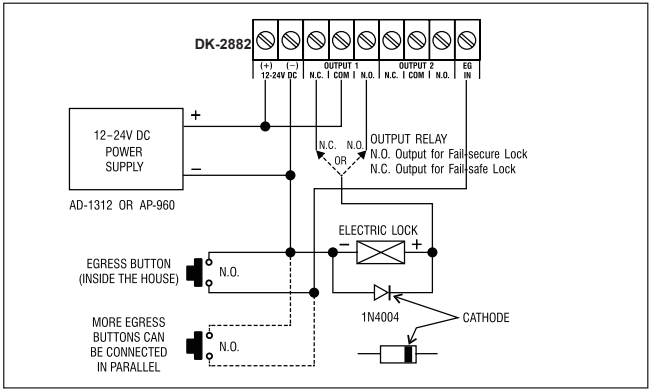

NOTE:

- Connect the 1N4004 as close as possible to the lock in parallel with the lock power terminals of the lock to absorb the back EMF to prevent it from damaging the keypad. The 1N4004 is not required if the electric lock is AC operated.

- To avoid Electro-Static-Discharge from interfering with the operation of the keypad, always ground the (–) terminal of the keypad to earth.

- Always connect DOOR SENSOR terminal to (–) ground if not used.

8 0	Door Forced Open Warning & Time	**FUNCTION MODE / TIME:** 0---OFF 1-999 Seconds	8 0 FUNCTION / TIME #	Mode = 0, Door Forced Open Warning OFF
8 1	Propped-up Warning & Time		8 1 FUNCTION / TIME #	Mode = 0, Propped-up Warning OFF
9 0	Egress Delay Warning & Alarm	**CODE 1 – FUNCTION MODE:** 1---Momentary, No warning 2---Momentary, with warning 3---Momentary, with warning + Alarm 4---Hold Contact, No warning 5---Hold Contact, with warning 6---Hold Contact, with warning + Alarm **CODE 2 – DELAY TIME:** 0---No Delay 1-99 Seconds	9 0 CODE 1 CODE 2 #	Mode = 1 Momentary, No warning TIME = 0 No Delay
9 1	Door Opening Alarm & TIMER	**ALARM TIME:** 0---No Alarm 1-999 Seconds	9 1 ALARM TIME #	Time = 0, No Alarm
9 4	Operation Mode & Wiegand Output	**MODES OF WIEGAND OUTPUT** 0---Stand Alone Keypad–Valid Codes & Cards Only 1---Reader–All Codes & Cards 2---Master Keypad–Valid Codes & Cards only 3---Slave Keypad–Valid Codes & Cards only	9 4 WIEGAND O/P MODE #	Mode = 0 Keypad Mode

SYSTEM CODES	FUNCTION	CODE ENTRY	RESULTS
0 0 0 0	Factory Set Master Code for User to set system in programming Mode at the first time. THIS IS NOT A PERMANENT SYSTEM CODE & IT IS CHANGED IF A NEW MASTER CODE IS PROGRAMMED.	0 0 0 0 * * OR NEW MASTER CODE * *	System in Programming Mode
9 9 9 9	REFRESH CODE -- Refresh the system and set all its function back to default values.	9 9 9 9 #	All programmed data are cleared and back to the default values except the Master Code
8 0 8 0	DAP CODE-- Direct access to programming mode. Valid only in the power-up delay period	8 0 8 0 #	System in Programming Mode
0 9 9 9	USER PINs / Codes / Cards whole group clearance Code – Key in the Code to clear all the users in the Location LOCATIONS: 10--- User Group 1 20--- User Group 2 30--- User Group 3 40--- Vistor Group 41--- Duress Group 1 42--- Duress Group 2 43--- Duress Group 3	LOCATION NO. 0 9 9 9 #	Whole group of users in the selected location are cleared
* *	Exit Programming Code	* *	The system back to normal opration after programming

- **18 : INTER-LOCK O/P (Inter-lock Control Output)**

An NPN transistor open collector output with the maximum power rating of 24VDC/100mA sink. It is OFF at normal condition and it switches to (–) ground immediately for the first 5 seconds after keying in a valid User PIN or reading a card to operate Output 1, then, it will keep tying to (–) ground during the Door Position Sensor is open circuit due to door opening. Use this output point to make cross wire connection with the other keypad's "O/P 1 Inhibit" point in an Inter-lock system to prevent both doors can be opened at the same time.

An Inter-lock System:
An inter-lock system is a two-door system that always allows only one of the doors to open during the operation. While one of the doors is opened, the other door keeps close until the open door is re-closed. It prevents the unauthorized people dashing into a protected area while the doors are in use. An inter-lock system needs two keypads and two door position sensing switches for the two doors.

- **19 - 20 : TAMPER N.C. (Tamper Switch Normally Closed Contact)**

A normally closed dry contact while the keypad is secured on its box. It is open while keypad is separated from the box. Connect this N.C. terminal to the 24 hour protection zone of an alarm system if necessary.
The tamper switch in the DK-2882A and DK-2882B is activated by the fixing screw of the front plate; in the DK-2882C and DK-2882D it is activated by a magnet equipped on the back of the plastic box.

THE ON-BOARD LED INDICATORS

- **RED / GREEN (Right)** ---It lights up in Green for Output 1 activation; and Red for Output 2 activation.
- **AMBER (Centre)** ---------- It flashes on Standby. It shows the system status in synchronization with the beep tones. The standby flashing can be set to OFF in programming. See Location 73 for the details.
- **RED (Left)** ---------- It lights up while one of the outputs is inhibited. It is also the Wiegand LED in reader mode

THE PACIFIER TONES & THE LED SIGNALS

The buzzer and the amber LED indicator give following tones and signals respectively for system status:

STATUS	TONES *	LED SIGNALS
1) On Programming Mode	-----	ON
2) Successful Key Entry	1 Beep	1 Flash
3) Successful Code / Card Entry	2 Beeps	2 Flashes
4) Unsuccessful Code / Card Entry	5 Beeps	5 Flashes
5) Power Up Delay	Continuous Beeps	Continuous Flashes
6) Output Relay Activation **	1 Second Long Beep	
7) On Standby ***	-----	1 Flash in 1 Second Interval
8) System Refreshing	-----	Fast Flashes for 2.5 Minutes
9) Card or PIN Already Stored in System	1 Long Beep	-----

NOTE:
* All Pacifier Tones can be ON or OFF through the programming option at Location 71
* * The Output Relay Activation beep can be selected through the programming option at Location 72
* * *The Standby flashing can be ON or OFF through the programming option at Location 73

THE JUMPER FOR BACK-LIT SELECTION

1) Full Back-lit --- The keypad gives dim backlit on standby. It turns to full backlit when a key button is pressed, then back to dim backlit 10 seconds after the last key button is pressed.
2) Auto Back-lit --- The backlit is OFF on standby. It turns to full backlit when a key button is pressed, then back to OFF10 seconds after the last key button is pressed.

FEATURE PROGRAMMING & OPERATION INSTRUCTIONS

SET SYSTEM INTO PROGRAMMING MODE WITH THE MASTER CODE

IMPORTANT NOTE:

1) **DO NOT TURN OFF POWER** while the keypad is in Programming Mode. Otherwise, it may cause data lost/error to the programmed features in the memory.
2) The keypad beeps after power up. Wait 1 minute until the end of the power up delay, then key in the Master Code for setting the system into programming mode.
3) For the owner's convenience in programming at the first time, the factory has put a Master Code **0 0 0 0** into the keypad (**It is NOT a default code**). To compromise security, in all cases, the owner should program a new Personal Master Code to invalidate the factory set Master Code after the keypad is owned.
4) The **Button** has two functions in the keypads with Door Bell button. It is a door bell button while the keypad is in normal operation; and it is equivalent to a **Button** in programming mode.

MASTER CODE

- The Master Code can be a factory set master code or the private master code that was set by the owner.
- Validate the master code with * * (or) .
  2-beep confirms a valid master code. The Mains LED (Amber) is constantly ON after the system is set in the programming mode.

DIRECT ACCESS TO PROGRAMMING MODE WITH THE "DAP" CODE – 8 0 8 0

Set System Into Programming Mode With DAP Code In Case Of The Master Code Is Forgotten ! !

The owner requires to apply the following procedures precisely to set the system into programming mode with the DAP code **8 0 8 0.**

1) Switch OFF all the power for 1 minute to ensure that the system is fully discharged.
2) Switch ON power again. The system is in Power-up Mode for 1 minute and the buzzer gives beeps during the whole period. This is the only time limit for setting the system to Direct Access to Programming (DAP).
3) Press the Egress Button (EG IN) once first to enable the DAP function.
4) Key in the DAP Code **8 0 8 0** and validate it with * * (or), **the existing Master Code in the memory is erased** and the power up beep stops. The keypad turns itself into programming mode like using the Master Code and it is ready to accept the new programming data.
5) If the Egress Button is not pressed and the DAP code is not keyed in within the power up period, the system will set itself to normal operation mode. To set it back to power-up mode, repeat procedures 1-4.

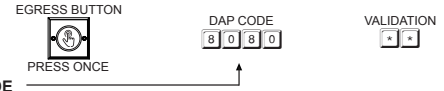

DAP CODE

- The DAP code is fixed on **8 0 8 0** and it is valid only in the Power-up Period after the Egress Button is pressed.
- Validate the DAP code with the * * (or).
- 2-beep confirms the system is in the Programming Mode; and the Mains LED is constantly ON.
- See "RECORD A MASTER CODE" at "Location 01" for the details of programming a new master code.

NOTE:
If the keypad is linking up with the DA-2800 controller in the Split-decoded operation, it is necessary to put the controller's "Link-up Jumper" to "ON" position to get the new Master Code for it. As the Master Code is also the link-up code of the two units. **Do Not Forget** to put the Link-up jumper back to OFF position after the programming. Otherwise, the controller will accept other keypads to link up with it.

PROGRAMMING SUMMARY CHART

LOCATION	FUNCTION	ENTRY LIMITS & CODE OPTIONS	CODE ENTRY	FACTORY DEFAULT
0 1	Master Code	4-8 Digits	0 1 MASTER CODE #	NIL
0 2	Super User PIN	4-8 Digits	0 2 SUPER USER PIN #	NIL
0 3	Common User PIN for O/P 1	4-8 Digits	0 3 COMMON USER PIN 1 #	NIL
0 4	Common User PIN for O/P 2		0 4 COMMON USER PIN 2 #	NIL
0 5	Common User PIN for O/P 3		0 5 COMMON USER PIN 3 #	NIL
1 0	User PINs / Cards for O/P 1	**CODE 1 – MEDIA:** 1---EM Card 2---Private User PIN 3---EM Card+Sec User PIN 4---EM Card+Com User PIN 5---Deletion of User PIN **CODE 2 – USER ID:** 000-999---Group 1(10) 001-100---Group 2(20) 001-100---Group 3(30) **CODE 3 – USER PINs / Cards:**4-8 Digits / Cards	1 0 CODE1 CODE2 CODE3 #	NIL
2 0	User PINs / Cards for O/P 2		2 0 CODE1 CODE2 CODE3 #	NIL
3 0	User PINs / Cards for O/P 3		3 0 CODE1 CODE2 CODE3 #	NIL
4 0	Visitor Codes	**CODE 1 – VISITOR ID:** 01-50 **CODE 2 – VALID PERIOD:** 00---One Time 01-99 Hours **CODE 3 – VISITOR CODE:** 4-8 Digits	4 0 CODE1 CODE2 CODE3 #	NIL
4 1	Duress Code for O/P 1	**CODE ID – O/P 1:** 01-50 **CODE ID – O/P 2:** 01-10 **CODE ID – O/P 3:** 01-10 **DURESS CODE:** 4-8 Digits	4 1 CODE ID DURESS CODE #	NIL
4 2	Duress Code for O/P 2		4 2 CODE ID DURESS CODE #	NIL
4 3	Duress Code for O/P 3		4 3 CODE ID DURESS CODE #	NIL
5 1	O/P Mode for O/P 1	**OUTPUT MODE & TIME:** 0--- Start / Stop 1---99999 Seconds, Momentary	5 1 O/P MODE & TIME #	5 Seconds
5 2	O/P Mode for O/P 2		5 2 O/P MODE & TIME #	5 Seconds
5 3	O/P Mode for O/P 3		5 3 O/P MODE & TIME #	5 Seconds
6 0	Personal Safety & Lock-out	**LOCK-OUT CODE:** 1---10 Trial, Lock-out 60 Sec. 2---10 Trial, Activates Duress 5-10---5-10 Trial, Lock-Out 15 Minutes 00---No Lock-out	6 0 LOCK-OUT CODE #	Code = 1, 10 Trials, Lock-out 60 Seconds
7 0	PIN Entry Mode	**ENTRY MODE:** 1---Auto Mode 2---Manual Mode	7 0 ENTRY MODE #	Mode = 2, Manual Mode
7 1	Pacifier Tone ON-OFF	**FUNCTION MODE:** 0---OFF 1---ON	7 1 FUNCTION MODE #	Mode = 1, Pacifier Tone ON
7 2	Output Announcer		7 2 FUNCTION MODE #	Mode = 1 Announcer ON
7 3	Standby LED Flashing		7 3 FUNCTION MODE #	Mode = 1, Flashing ON

THE APO DATA I/O PORT -- FOR SETTING UP A SPLIT-DECODED KEYPAD

The information here is for setting up the keypad unit with an optional "**Digital Keypad Access Controller DA-2800**" to make up a high security Split-decoded Keypad system only. It is **NOT** required for the keypad in **Stand Alone** operation.

The access control system utilizing of Wiegand data and control panel approach is usually taken by consultants when setting their product designs. Most of the general end users do not make system installation criteria by themselves but just like to up grade their system to a split-decoded system. A Digital Keypad Access Controller DA-2800 is instantly available from APO for purchase. This keypad is fully compatible with the DA-2800.

The keypad unit comes with a data I/O (data input and output) port for the connection with the APO's Access Controller DA-2800 for Split-decoded operation to up-grade its security level. Once the keypad unit is connected with the controller, all the commands from it will be faithfully decoded by the decoder. The input & output control functions available from the keypad are now all transferred to the controller. The keypad's role is just a card reader and/or a keyboard for code entry. The link up of the two units is very simple. It is just one wire (The White Wire) for the I/O ports and a common grounding wire (The Black Wire) for the two units. The I/O port provides the data in the proprietary APO format. It **ONLY** works with the DA-2800.

The Optional DA-2800 Controller --- Introduction

The DA-2800 controller unit is compatible with the keypad unit. Maximum 3 keypads can be connected in parallel to it. It decodes the data faithfully from the keypads even each of them have different settings of their own. The only criterion for multi-keypad link-up is all the keypads are set with the same Master Code and is read by the controller while it is in the link-up mode.

Apart from the decoding function to follow the features from the keypad(s), the DA-2800 is also an independent 4-channel RF remote controller to operate its 3 output relays and the built-in door chime. The DA-2800 is an ideal device working independently in the RF remote control areas, such as door lock strike in access control, garage door opening control, alarm arm-disarming control and automatic operator control etc.

The keypad unit is up graded to a Tri-Tech system after in connection with the DA-2800 controller. The system accepts EM Cards, User PINs and the RF Remote Keys in access control.

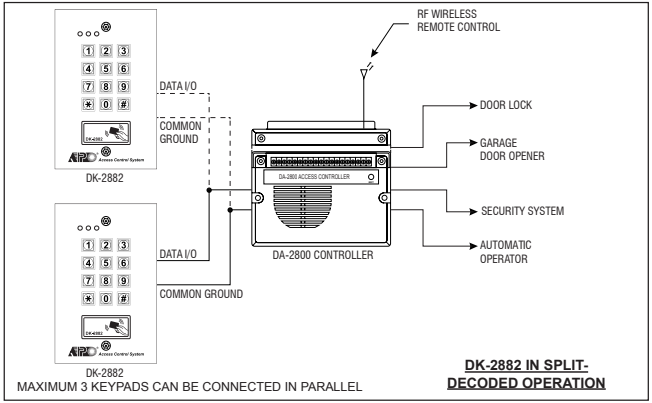

The User Manual of the DA-2800 provides the operation details of the system on decoding controller mode and independent operation mode.
Please contact your local agent if purchase of the DA-2800 Controller is required.

REFRESH THE SYSTEM WITH THE "REFRESHING CODE" --- 9 9 9 9

The system can be refreshed to clear all the old data stored and back to its ex-factory default values.

IMPORTANT NOTE:

Make sure that you really want to clear **ALL the OLD** data before entering of the Refreshing Code. The keypad will be back with its default values like a new unit. Re-program of the desired values are necessary.

REFRESHING CODE: 9 9 9 9 — VALIDATION: #

REFRESHING CODE

- The Code **9 9 9 9** is for refreshing of the system. Once it is keyed in and validated with #, all the values programmed previously will be cleared **EXCEPT the Master Code**.
- The refreshing takes around 2.5 minutes. During the keypad is being refreshed the Status LED (Amber) flashes fast until the end.

THE DEFAULT VALUES OF THE KEYPAD

PROGRAMMING

LOCATION	PARAMETERS	DEFAULT FUNCTIONS & VALUES
0 1	Master Code	0 0 0 0 Factory Set, Not a default value *
0 2	Super User PINs	Nil ----- User Program Required
0 3	Common User PIN 1	Nil ----- User Program Required
0 4	Common User PIN 2	Nil ----- User Program Required
0 5	Common User PIN 3	Nil ----- User Program Required
1 0	User PINs & Cards for O/P 1	Nil ----- User Program Required
2 0	User PINs & Cards for O/P 2	Nil ----- User Program Required
3 0	User PINs & Cards for O/P 3	Nil ----- User Program Required
4 0	Visitor Codes	Nil ----- User Program Required
4 1	Duress Code for O/P 1	Nil ----- User Program Required
4 2	Duress Code for O/P 2	Nil ----- User Program Required
4 3	Duress Code for O/P 3	Nil ----- User Program Required
5 1	O/P Mode of The O/P 1	Time = 5 Sec, Momentary
5 2	O/P Mode of The O/P 2	Time = 5 Sec, Momentary
5 3	O/P Mode of The O/P 3	Time = 5 Sec, Momentary
6 0	Personal Safety & Lock-out	Code = 1, 10 False Code/Card Lock-out 60 Sec
7 0	User Code Entry Mode	Code = 2, Manual Entry Mode
7 1	Pacifier Tones ON-OFF Selection	Code = 1, Pacifier Tone ON
7 2	O/P Operation Announcer	Code = 1 Sec, Notification Beep ON
7 3	Status LED Standby Flashing ON-OFF	Code = 1, Flashing Enabled
8 0	Door Forced Open Warning & Timing	Code = 0, Warning Disabled
8 1	Door Propped-up Warning & Delay	Code = 0, Warning Disabled
9 0	Egress Delay & Warning	Code 1 = 0, Instant, No Delay
		Code 2 = 1, Momentary Contact without Warning
9 1	Door Opening Alarm & Timer	Code = 0, Alarm O/P Disabled
9 4	Operation Modes & Wiegand Output	Code = 0, Wiegand O/P for Valid Code/Card Only

NOTE:

The DAP Code **8 0 8 0** and the Refreshing Code **9 9 9 9** are fixed in the operating system program. It can not be changed in any ways or be influenced by the system in default setting.

KEYPAD PROGRAMMING MAKE SIMPLE – For General Users

The DK-2882 is a multi purpose keypad. It has many functions for user's selection. For those general users taking the keypad for door strike only, most of the features can be kept in their Default values. Only the User PINs / Cards and a private Master Code are necessary to program for the system.

The keypad accepts **1) Card only**, **2) PIN only**, **3) Card + PIN** or **4) Card + Common User Code** to operate its outputs.

PROGRAMMING

NOTE:

a) The [🔔] button is equivalent to the [*] button in the keypad with bell button.

b) Wait 1 minute until the end of the power up delay.

1) Set System into Programming Mode with The Factory Set Master Code 0 0 0 0

[0][0][0][0] [*][*] ---- 2 beeps, system is in Programming Mode

Note: If the Master Code is forgotten, use the DAP Code to set the system into programming mode. See DAP CODE 8080 on the previous page for the details.

2) Change The Factory Set Master Code to Owner's Private Master Code for Security Reason

[0][1] [3][2][8][9] [#] ---- 2 beeps, 3 2 8 9 is a Master Code for example here only

3289 is the new Master Code and the 0000 is erased

3) Record an "EM Card" to Operate The Output 1 for Door Open

[1][0] [1] [0][0][1] [READ CARD] [#]

(a) (b) (c) (d) (e)

(a) 10 = Programming Location for Output 1
(b) 1 = Programming option for EM Card only
(c) 001 = One of the 1,000 User IDs for the User PIN/Card from 000-999
(d) Read Card = Put the Card close to the card reader
(e) # = Confirm the card is read, 2 beeps

4) Set an "User PIN" to Operate The Output 1 for Door Open

[1][0] [2] [0][0][2] [8][3][2][1] [#]

(a) (b) (c) (d) (e)

(a) 10 = Programming Location for Output 1
(b) 2 = Programming option for User PIN only
(c) 002 = One of the 1,000 User IDs for the User PIN/Card from 000-999
(d) 8321 = The User PIN that is programmed for door open. 8321 is an User PIN for example here only
(e) # = Confirm the User PIN, 2 beeps

5) Record an "EM Card + User PIN" to Operate The Output 1 for Door Open

[1][0] [3] [0][0][3] [READ CARD] [6][1][2][3] [#]

(a) (b) (c) (d) (e) (f)

(a) 10 = Programming Location for Output 1
(b) 3 = Programming option for EM Card + User PIN. (The User PIN can be repeated use or proprietary)
(c) 003 = One of the 1,000 User IDs for the User PIN/Card from 000-999
(d) Read Card = Put the Card close to the card reader
(e) 6123 = The User PIN to be used with the EM Card. 6123 is an User PIN for example here only.
(f) # = Confirm the Card+PIN is stored, 2 beeps

THE 34 BIT WIEGAND DATA OUTPUT FROM THE ENTRY OF USER PINS

Wiegand is also a commonly used interface between keypad with user PINs and control panels used in access control. The keypad unit is designed to accept both card reading and PIN code entry in operation without conflict to the two media and confusion to the control panel. It accepts User PINs up to 8 digits maximum in decimal numbers. The Wiegand data protocol has been expended to 34 bits to accommodate the maximum PIN length without causing code error (26 bits Wiegand data for PIN causes error to number 16,777,215 or any number above 16,777,215). The 34 bit and the 26 bit Wiegand signals are transmitted in the same electrical manner and timing standard in Binary Codes.

The 34 bit Wiegand protocol for PINs has 1 first parity bit, 32 bits for the PIN code, and 1 stop bit for a total of 34 bits. The first parity bit is an **Even parity** bit calculated from the first 16 bits of the code and the trailing parity bit is an **Odd parity** bit from the last 16 bits.

Example 2 : Wiegand Output from PIN / Code Entry

A) The keyed-in PIN is 1 2 3 4 5 6 7 8
The PIN in Decimal Number : 1 2 3 4 5 6 7 8
The PIN 1 2 3 4 5 6 7 8 Equivalent to Hex Number : B C 6 1 4 E

E 0 0 B C 6 1 4 E O

An **E**ven Parity Bit of **0 0 B C = 1** An **O**dd Parity Bit of **6 1 4 E = 0**

The 34 bits Wiegand data sending out in Binary from entry of the PIN:

1 0000 0000 1011 1100 0110 0001 0100 1110 0

B) The keyed-in PIN is 1 2 3 4
The PIN in Decimal Number : 1 2 3 4
The PIN 1 2 3 4 Equivalent to Hex Number : 4 D 2

E 0 0 0 0 0 4 D 2 O

An **E**ven Parity Bit of **0 0 0 0 = 0** An **O**dd Parity Bit of **0 4 D 2 = 0**

The 34 bits Wiegand data sending out in Binary from entry of the PIN:

0 0000 0000 0000 0000 0000 0100 1101 0010 0

C) The keyed-in PIN is 0 0 0 0 1 2 3 4
The PIN in Decimal Number : 0 0 0 0 1 2 3 4
The PIN 0 0 0 0 1 2 3 4 Equivalent to Hex Number : 4 D 2

E 0 0 0 0 0 4 D 2 O

An **E**ven Parity Bit of **0 0 0 0 = 0** An **O**dd Parity Bit of **0 4 D 2 = 0**

The 34 bits Wiegand data sending out in Binary from entry of the PIN:

0 0000 0000 0000 0000 0000 0100 1101 0010 0

Important Note:

a) From the above examples (B) & (C), The PINs 1 2 3 4 and 0 0 0 0 1 2 3 4 give the same Wiegand data output in Binary.

b) Pressing any number of only 0's prior to the PIN makes error code in Binary. Do NOT program the PIN with 0's in front of it.

THE 26 BIT WIEGAND DATA OUTPUT FROM THE EM CARDS

The Wiegand protocol for card reading has 1 first parity bit, 24 bits of the Card ID, and 1 stop bit for a total of 26 bits. The first parity bit is an **Even parity** bit calculated from the first 12 bits of the code and the trailing parity bit is an **Odd parity** bit from the last 12 bits. The data transmitted is in **Binary codes for the Card reading**.

Example 1: Wiegand Output of Reading An EM Card

Each EM card or Keyfob is marked with an unique ID in Decimal Digits that is the code read by the reader. The EM card is also marked with a "3 digit+5 digit" code that does not belong to this system and can be ignored.

a) The Code Marked on One of The EM Cards :

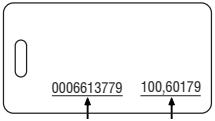

The ID Code to be read for Wiegand Output The Site Code and the ID number

The Code in Decimal Number : 6 6 1 3 7 7 9
The Code 6 6 1 3 7 7 9 Equivalent to Hex Number : 6 4 E B 1 3

b) Each Hex Number Consists of 4 Bits, Total 26 Bits of Wiegand Data Output from Card Reading:

E 6 4 E B 1 3 O

An **E**ven Parity Bit of **6 4 E = 0** An **O**dd Parity Bit of **B 1 3 = 1**

c) The 26 bits Wiegand data sending out in Binary after reading of the card:

0 0 1 1 0 0 1 0 0 1 1 1 0 1 0 1 1 0 0 0 1 0 0 1 1 1

NOTE:
In all the operation configurations of card reading including "Card only", "Card + Secondary User PIN", and "Card + Common User PIN", the card has the priority to be read and all these configurations are considered of reading a Card. The keypad provides Wiegand Data output for the Card only and the User PINs attached are NOT taken into account for the Wiegand output.

6) Record an "EM Card + Commom User Code" to Operate The Output 1 for Door Open

[1][0] [4] [0][0][4] [READ CARD] [#]
(a) (b) (c) (d) (e)

(a) 10 = Programming Location for Output 1
(b) 4 = Programming option for EM Card + Common User Code
(c) 004 = One of the 1,000 User IDs for the User PIN/Card from 000-999
(d) Read Card = Put the Card close to the card reader
(e) # = Confirm the card is read, 2 beeps, the Common User Code goes to this User ID automatically
(f) A Common User Code (for example: 8 6 2 5) **MUST** be set at the Programming **Location 03** first for this operation mode. The code can be used for all the EM Cards in this operation mode.

REMARK:
If more User PINs and Cards are required for Output 1, repeat the procedures (3) , (4) , (5) or (6) above with other User IDs, such as 005, 006, 007 --- 999 etc. Total 1,000 users are allowed. See Programming Location 10 for the details.

7) Close The Programming Mode

[*][*] ---- 2 beeps

The programming mode is closed. The keypad is back to normal operation mode

OPERATION

8) Open The Door with The EM CARD

[READ CARD]---- 2 beeps, the door is open

9) Open The Door with The User PIN

[8][3][2][1] [#] ---- 2 beeps, the door is open

10) Open The Door with The EM CARD + User PIN

[READ CARD] [6][1][2][3] [#] ---- 2 beeps, the door is open

11) Open The Door with The EM CARD + Common User Code

[READ CARD] [8][6][2][5] [#]---- 2 beeps, the door is open

REMARK:
In the next Section, "KEY IN AND STORE THE DESIRED VALUES" describes all the features and functions of the system in detail. Users can follow them to tailor the desired values for their access control systems. Suggest the general users also spend some time on them to get acquaint with this powerful system for future expansion.

FEATURE PROGRAMMING -- KEY IN AND STORE THE DESIRED VALUES

The feature values can be set and stored into the system one by one with the desired **Programming Locations**. Programming can be made continuously and it is not necessary to be in sequence order. Just go to the desired programming location and key in the value for the desired feature.

IMPORTANT NOTE --- Programming Criteria for Codes:

a) The Prime Codes:
All the Private User PINs, Master Code, Duress Codes, Super User PIN, Common User Codes and the Visitor User Codes belong to Prime Codes in the system. They have the priority to be read and they **MUST be unique** and can not be repeated in the programming. A Prime code also can **NOT** be duplicated for Secondary code to work with the EM Card or vice versa.

b) The Prime Cards:
All the EM Cards used in this system are Prime Cards. The cards used for the Outputs 1, 2 and 3 **MUST be unique** and can not be repeated use for different Outputs in the programming. The Card always has the priority to be read when working in "EM Card + Secondary PIN" or "EM Card + Common User PIN".

c) Warning for A Repeated Use of Prime Code or Card:
One long beep is given if a Code/PIN is keyed in or a Card is read. It means that a Prime Code or a Prime Card is repeated. The Code/PIN or Card was already in one of the PIN or Card Locations or IDs. The programming is invalid. Change a new Code/PIN or Card and program it again.

d) Secondary User PINs:
The Secondary User PINs are prepared to enhance security. It is put after a Card in "**EM Card + Secondary User PIN**" programming. They can be a repeated code within the Secondary PINs but it is **NOT** allowed a duplicate of the Prime Codes. The system will reject a duplicated Prime Code for Secondary User PIN or vice versa.

e) Getting Advantages from The Secondary User PINs:
The repeated Secondary PINs can be used as a Group Common User Code or called Department User Code for a group of EM Cards, which simplifies the programming of using large number of different User PINs. EM Card with Department Code prevents a lost card used by people of other department. Also, it will be easier to trace out the department of the lost card belongs to. Of cause, the owner can use a proprietary Secondary User PIN for each EM Card in the "**EM Card + Secondary User PIN**" programming to further increase the security if it is the main concern.

f) Security Level Comparison of The Secondary User PIN/Code following Card Reading:

i) EM Card + Common User Code --- All EM Cards use the same User Code. Security level is better than just Card only. A lost Card picked up by any people can be used if he knows the Common User Code.
ii) EM Card + Department User Code --- The EM Cards are divided into groups with a Department User Code. A lost Card can be used only by the people in the same group who know the Department Code.
iii) EM Card + Secondary User PIN --- Each EM Card has its own proprietary User PIN. A lost Card can not be used by other people.

NOTE:
Each EM Card is a Prime card and it has the priority to be read. The system provides the proprietary Wiegand Data output from each card only. The Secondary PIN/Code following the card reading does not affect the ID of the Card in the Wiegang Data.

g) Make A List Recording of The User Names VS User Codes:
Suggest the owner to make a list recording of the User Names corresponding to the Codes/PINs/Cards that are going to store in the Locations and the IDs before the programming. It will be a useful tool for the owner to easily program them smoothly and also to trace them from this multi-users system in the future.

Example: (Please see the following page)

TIMING & ELECTRICAL MANNER OF THE WIEGAND DATA OUTPUT

Wiegand is a commonly used interface between readers and control panels used in access control, security and other related industries. The majority of cards in access control systems use a Wiegand interface to transmit data read from a card to a control panel. The control panel will then validate the data received and grant or deny access. The Wiegand data output from the keypad unit provides a level of compatibility for readers and control panels that can be used by consultants and end users when setting product design or system installation criteria.

The Wiegand interface uses three wires, one of which is a **Common Ground (Wire 5 – Black)** and two of which are data transmission wires called **DATA 0 (Wire 2 – Blue)** and **DATA 1 (Wire 1 – Yellow)**. When no data is being sent both DATA 0 and DATA 1 are at high voltage. When a "0" is sent the DATA 0 is at low voltage while the DATA 1 stays at a high voltage. When a "1" is sent DATA 1 is at the low voltage while DATA 0 stays at the high voltage.

There are also two indication wires for the visible and audible signals feeding back from the control panel. They are 0V active. The **Buzzer Control Line (Wire 3 – Brown)** is audible signal control wire, and the **Red LED Control Line (Wire 4 – Red)** is the visible indication control wire.

The high voltage level in the keypad unit is +5VDC to accommodate for long cable runs (approximate 500 feet) from it to the associated access control panel typically located in a secure closet.

Diagram of The Wiegand Protocol Timing and Its Electrical Manner

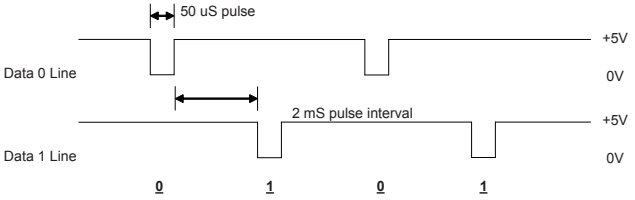

THE OPERATION MODES AND THE WIEGAND OUTPUT (Location 94)

Four operation modes are available for the selection. The codes are **0**, **1**, **2** and **3**.

LOCATION	OPERATION MODE	VALIDATION
9 4	0 , 1 , 2 or 3	#

WIEGAND OUTPUT AT KEYPAD OPERATION MODE

0 --- Stand Alone Keypad Mode -- (Default)

The system provides full functions to operate its outputs and at the same time provides Wiegand Data Output for all the **VALID** Cards and User PINs including the Duress Codes and Visitor Codes. No Wiegand Data Output for the invalid PINs and Cards.

1 --- Card & Code Reader Mode

In the Card & Code Reader Mode, the keypad provides Wiegand Data Output for all the Card readings and PINs/Code entries but does not operate its outputs. It is solely a card and code reader.

NOTE:

It is suggested to clean all the codes, PINs and cards that were previously stored in the system before setting the system for reader mode.

2 --- Master Keypad of Split-Decoded Mode

The keypad unit provides the Wiegand Data Output for the valid user PINs, Codes and Cards exactly like in the Stand Alone Mode. The Master keypad will transfer all the programmed feature data (except the user PINs, Codes and Cards data) to the Access Controller (decoder) right after it exits the programming mode. A Split-decoded keypad system needs at least one Master keypad and one Access Controller to work.

3 --- Slave Keypad of Split-Decoded Mode

The Keypad unit provides the Wiegand Data Output for the valid user PINs, Codes and Cards exactly like in Stand Alone Mode. No feature data is transferred to the Access Controller (decoder) from the Slave keypad. It takes the same feature data from the Master keypad to operate. The Slave keypad(s) is for a Split-Decoded system that needs more than one keypads for operation convenience.

NOTE:

a) Do not set more than one keypads in Master mode in a Split-Decoded system. Otherwise, the data will be confused.

b) Each keypad in Split-Decoded mode can be programmed independently with its own user PINs, Codes and Cards. The PINs, Codes and Cards can be repeatedly used in other keypads in the same system.

Example:

User	Name	Location	Function Code	User ID	PIN/Code	Card #	Remark
1							
2							
3							
4							
5							
6							
7							
8							
9							
10							
11							
12							
13							
14							
15							
16							
--							
1,000							

RECORD A MASTER CODE (Location 01)

LOCATION	MASTER CODE	VALIDATION
0 1	4 to 8 Digits	#

MASTER CODE

- Master Code is the authorization code for setting the system to programming mode. It is **NOT** an User Code operating of the output relays.
- The Master Code can be 4 to 8 digits. Press # key to confirm code entry
- When a new master code is keyed in and confirmed, the old master code is replaced automatically.
- The master code is also the **Link-up Code** between the keypad and the optional controller of the system in Split-decoded operation.
- **Example**: Set a Master Code with the number of “2 2 3 3” ---- 0 1 2 2 3 3 #

RECORD A SUPER USER PIN (Location 02)

The Super User PIN has TWO functions. It is prepared for the owner to simply use only one User PIN to operate the three outputs of the keypad and make operation inhibit enable / disable to the system outputs.

LOCATION	SUPER USER PIN	VALIDATION
0 2	4 to 8 Digits	#

SUPER USER PIN

- The Super User PIN can be 4 to 8 digits.
- Two beeps will be heard after pressing the # key to confirm code entry.
- When a new Super User PIN is keyed in and confirmed, the old one is replaced.
- **Example**: Set a Super User PIN with the number of “2 5 8 0” ---- 0 2 2 5 8 0 #
- To deleted a Super User PIN from memory: Key in just the Location number and #. ---- 0 2 #

OPERATION AND FUNCTIONS OF THE SUPER USER PIN

1) Operate Output 1, 2, and 3

The operation of the Super User PIN is just like a normal User PIN. Simply key-in the PIN with a specific output number for the desired Output. The Super User PIN can also be used to reset an operating output timer instantly.

SUPER USER PIN # 1 ---------- Output 1 Activates or Output 1 Resets

SUPER USER PIN # 2 ---------- Output 2 Activates or Output 2 Resets

SUPER USER PIN # 3 ---------- Output 3 Activates or Output 3 Resets

2) Inhibit The User PINs For Output 1

The Super User PIN can also be used to inhibit the normal User PINs/Cards for the Output 1 (usually they are for door strike). It enhances the security level of the access control system, such as to stop a keypad after office hour or while the house is nobody inside. Once the Output 1 is inhibited, the User PINs/Cards for it become invalid and those people even know the User PINs are refused during the system is inhibited. The inhibit function is toggled in Start / Stop mode with the following code entry.

SUPER USER PIN # 9 ---------- The Whole Group of User PINs & Cards for Output 1 are Disabled or Enabled in Toggle

NOTE:

- The inhibit function setting with the Super User PIN applies to the whole group of User PINs and Cards for Output 1 **ONLY**, but not for Output 2 or Output 3.
- For safety reason, the inhibit function initiated with the Super User PIN does not govern the Egress Button. The door still can be opened with it from inside.
- The Super User PINs are always valid. They are not governed by any inhibit or lock out function in the system.

RECORD THE COMMON USER PINS FOR OUTPUT 1, 2 & 3 (Locations 03, 04, & 05)

The Common User PINs 1, 2 and 3 are prepared for operating of the Output 1, Output 2 and Output 3 respectively as an enhance code. The Common User PINs **MUST** work in the form of "Card + Common PIN" to operate the outputs to increase the security of the access control system. See Locations 10, 20 & 30 for more information.

NOTE : Common User PIN alone can **NOT** be used to operate the Outputs directly.

LOCATIONS	COMMON USER PIN	VALIDATION
0 3 – 0 5	4 to 8 Digits	#

COMMON USER PIN LOCATIONS

- 0 3 -- Location Stores The Common User PIN for Output 1
- 0 4 -- Location Stores The Common User PIN for Output 2
- 0 5 -- Location Stores The Common User PIN for Output 3

COMMON USER PINS

- The Common User PIN can be 4 to 8 digits. Press # key to confirm the code entry.
- When a new Common User PIN is keyed in and confirmed, the old one is replaced.
- **Example**: Set a Common User PIN with the number of "1 3 5 7" for Output 1 ---- 0 3 1 3 5 7 #
- To deleted a Common User PIN from memory: Key in just the Location number and #. ---- 0 3 #

THE WIRE HARNESS FOR "WIEGAND DATA OUTPUT" & "APO DATA I/O"

NOTE: The information in this section is **NOT** for the system in **Stand Alone** operation. It is not necessary to plug in the wire harness to the socket, just leave it open.

The information below is for setting the keypad unit with the Wiegand data interface to a control panel, or the APO Data I/O interface to an APO Controller to make up a high security split-decoded system.

Split-decoded Keypad System

Most of the general purpose keypads on the market are self-contained systems for stand alone operation. It controls the appliance(s) directly with its output relay contact(s); such as the electric lock in an access control system. The electric lock is connected to the keypad that is installed outside the house. The thief can open the door without a code or card but just open the keypad box and make contact to the output relay terminal. It is a safety drawback in security.

The high security systems are usually operating in the Split-decoded mode that combines an outside unit for card reading and code entry; and a control panel or a decoder unit installing in a secure closet inside the house. The outside unit and the inside unit communicate in digital data with each other. All the commands are in digital codes, the thief can do nothing to the inside unit even the outside unit is opened in sabotage. This design philosophy confirms high security to the area protected, but not just relying on the protection of the keypad with the outer box and two screws.

The Wire Harness

The keypad unit comes with two sets of interface wires from the wire harness. The Wires 1-4 are the Wiegand interface wires. The Wire 6 is the Data Input/Output wire for the connection with the optional APO's Digital Keypad Access Controller, DA-2800 for high security Split-decoded operation. The Wire 5 is the Common Grounding point of these signal wires. Please see the location of the wire Harness on Page 7.

The Wires for "Wiegand & Data" :

1) Yellow --------- D1, Wiegand DATA 1
2) Blue ---------- D0, Wiegand DATA 0
3) Brown --------- BUZ, Buzzer control line, 0V active, for Wiegand audible status indication
4) Red ---------- LED, Red LED control line, 0V active, for Wiegand visible status indication
5) Black --------- GND, (–) Common Ground
6) White --------- DATA, APO's data In/Out line, for APO's decoder connection

EXAMPLES:

Example 1: Set Egress Button in Momentary contact 5 seconds with delay & warning beep

9 0 (a) 2 (b) 5 (c) # (d)

(a) Egress function programming, **(b)** Momentary contact with warning, **(c)** Delay time of 5 seconds to release door, **(d)** Entry confirmation

Example 2: Set Egress Button in Holding contact of 10 seconds with warning beep

9 0 (a) 5 (b) 1 0 (c) # (d)

(a) Egress function programming, **(b)** Holding contact mode with warning, **(c)** Holding time of 10 seconds to release door, **(d)** Entry confirmation

Example 3: Set Egress Button in Momentary contact without delay (This is the default setting)

9 0 (a) 1 (b) 0 (c) # (d)

(a) Egress function programming, **(b)** Momentary contact without delay, **(c)** Release door instantly, **(d)** Entry confirmation

DOOR OPENING ALARM & TIMER (Location 91)

LOCATION 9 1 — ALARM TIME 0 or 1 – 9 9 9 — VALIDATION #

ALARM & TIMING OF DOOR OPENING

0 **--- No Alarm – (Default)**
The Alarm Output is disabled

1 – 9 9 9 **--- Alarm Timer**
The Door Open Alarm operates the Alarm Output (Terminal 13) only. It is mainly prepared to trigger an optional alarm system. Put any Timing Figure of 1 to 999 into the box to enable the function of the Door Opening Alarm. The figure is the time in second of the alarm duration, which starts to count after the door is opened and it resets automatically when the time reaches.

The alarm can be stopped with the User Codes/Cards or the Super User PIN for Output 1 at any time before the end of the alarm time.

NOTE: The Door Opening Alarm is designed to protect the emergency exit door from use by the un-authorized person. The alarm occurs when the door is opened or forced to open. However, Alarm will not happen if the door is opened with a valid User Code or Card.

The Manner of The Door Opening Alarm:

a) The door is forced to open without using PIN/Card – **Alarm**
b) The door is opened with Egress Button – **Alarm**
c) The door is opened with PIN/Card – **No Alarm**

To prevent confusion of the alarm outputs. It is suggested to disable the "Door Forced Open Warning" at Location 80 while "Door Opening Alarm" function is enabled. If both functions at Location 80 and Location 91 are enabled and are set with different timings, the system will combine them and will take the longer one for alarm time.

CLOSE THE PROGRAMMING MODE (* *)

Always close programming mode with * * to set system back to normal Operation after programming.

The 🔔 button is equivalent to the * button in the keypad with bell button.

VALIDATION

* * ---------- System is back to normal operation mode

RECORD-DELETE PINS OR CARDS FOR OUTPUT 1, 2, & 3 (Locations 10, 20 & 30)

Total of 1,200 **User PINs and/or Cards** are available for the 3 user groups to control the 3 outputs.

1) 1,000 ---- for Output 1 (Group 1)
2) 100 ------ for Output 2 (Group 2)
3) 100 ------ for Output 3 (Group 3)

The Private User PINs and Cards in the 3 user groups **MUST** be unique. Repeated PINs will be rejected. Secondary User PINs in the "EM Card + Secondary User PIN" can be repeated. See the **Important Note --- Programming Criteria for Codes** in page 14 for more information.

LOCATIONS 1 0 – 3 0 — MEDIA 1 – 5 — USER ID 0 0 0 – 9 9 9 — CARD &/OR USER PIN CARD &/OR USER PIN — VALIDATION #

USER GROUP LOCATIONS

1 0 **– Group 1 --For User PINs/Cards Controlling Output 1**
1,000 Users are allowed in group 1 for O/P 1

2 0 **– Group 2 --For User PINs/Cards Controlling Output 2**
100 Users are allowed in group 2 for O/P 2

3 0 **– Group 3 -- For User PINs/Cards Controlling Output 3**
100 Users are allowed in group 3 for O/P 3

SELECTION OF OPERATION MEDIA

- Number 1, 2, 3 or 4 represents the Media to be used to operate the keypad.
- Number 5 is the authorization code for deleting of an PIN and/or Card from its User ID.

1 = EM Card only; 2 = Private User PIN only;
3 = EM Card + Secondary User PIN 4 = EM Card + Common User PIN
5 = Delete an User PIN &/or Card from the selected User ID number

0 9 9 9 = Clear all the PINs & Cards from the selected Location. It takes few seconds to a minute to complete depending on the Location selected and the data stored.Please see the programming example below for the details.

USER ID NUMBER

- A **3-digit** ID is an identified number for each User PIN and/or Card.
- Repeated ID number will be rejected by the system

a) ID Number 0 0 0 – 9 9 9 for 1,000 User PINs/Cards to operate Output 1
b) ID Number 0 0 1 – 1 0 0 for 100 User PINs/Cards to operate Output 2
c) ID Number 0 0 1 – 1 0 0 for 100 User PINs/Cards to operate Output 3

CARD &/OR USER PINS

- The User PINs can be 4-8 digits. Key in the User PIN on each ID Number box, then confirm it with # key
- Just simply put the EM card close to the reader window to read it on each ID Number box, then, confirm it with # key if it is a **Card ONLY**, or **Card + Common User PIN** entry. The Common User PIN is **NOT** required to key-in here. It will go into its location automatically after the Card is read.
- Read the Card first, then key in the Secondary User PIN on each ID Number box, then confirm it with # key if it is **Card + Secondary User PIN**. The Secondary User PINs can be duplicated or a proprietary User PIN but can not be a duplicate of a Prime Code. Owner can use the same secondary User PIN for a group of Cards as a group Common User Code (or called Department Code) for a specific relay output.
- Cards (Operation Media # 1, 3, & 4) and Private User PINs (Operation Media 2) **MUST** be unique. A repeated EM card or Private User PIN will be rejected and one long beep will be generated by the system to notify the owner.

EXAMPLES – PROGRAMMING AND OPERATION

1) Example 1 -- EM Card Only :

i) Programming :

1 0 (a) 1 (b) 0 0 1 (c) Read Card (d) # (e)

(a) The card is programmed for operating of the Output 1
(b) The operation is EM Card only
(c) Take ID number 001 in Group 1 to store the card, which is one of the IDs in 000-999
(d) Put the card close to the reader to read it, one beep confirms the reading
(e) Press # to store the "Card" into memory, two-beep confirms a valid entry

ii) Operation : (while the system is back to operation mode)

Read Card (a)

(a) Put the EM card close to the reader. Two-beep confirms the card is read and the Output 1 activates

2) Example 2 -- Private User PIN Only :

i) Programming :

2 0 (a) 2 (b) 0 0 1 (c) 1 2 3 4 (d) # (e)

(a) The Private User PIN is programmed for operating of the Output 2
(b) The operation is Private User PIN only
(c) Take ID number 001 in Group 2 to store the Private User PIN, which is one of the IDs in 001-100
(d) Put Private User PIN "1 2 3 4" into the storage location
(e) Press # to confirm and store the "Private User PIN" into memory, two-beep confirms a valid entry

ii)Operation : (while the system is back to operation mode)

1 2 3 4 (a) # (b)

(a) Key in the Private User PIN "1 2 3 4"
(b) Confirm it with the # key. Output 2 activates

3) Example 3 -- EM Card + Secondary User PIN :

i) Programming :

1 0 (a) 3 (b) 0 0 2 (c) Read Card (d) 2 4 6 8 0 (e) # (f)

(a) The card is programmed for operating of the Output 1
(b) The operation is EM Card + Secondary User PIN
(c) Take the ID number 002 in Group 1 to store the Card & PIN, which is one of the IDs in 000-999
(d) Put the card close to the reader. One beep confirms the reading
(e) Put Secondary User PIN "2 4 6 8 0" into the storage location
(f) Press # to store the "Card + Secondary User PIN" into memory, two-beep confirms a valid entry

ii) Operation : (while the system is back to operation mode)

Read Card (a) 2 4 6 8 0 (b) # (c)

(a) Put the EM card close to the reader. Two-beep confirms the reading and 30 seconds waiting time is given for the entry of the User PIN, the Amber LED keeps flashing
(b) Key in the Secondary User PIN "2 4 6 8 0"
(c) Confirm it with the # key. Output 1 activates

EGRESS DELAY , WARNING AND ALARM (Location 90)

LOCATION	FUNCTION MODES	DELAY TIME	VALIDATION
9 0	1 – 6	0 or 1 – 9 9	#

CONFIGURATIONS OF THE EGRESS WARNING AND ALARM

Key in the number to enable 1 of the 6 configurations described below:

1 **--- Momentary Contact Mode without Warning -- (Default)**
- Press the Button once. No warning or alarm is given during Egress Delay.
- Good for silent area. The people have to wait for the door open until the delay time reaches.

2 **--- Momentary Contact Mode with Warning Beep**
- Press the Button once. The system gives Warning Beeps during the Egress Delay.
- Good for the place required attention. The keypad beeps during the people are waiting for the door open.

3 **--- Momentary Contact Mode with Warning Beep & Alarm**
- Press the Button once. The system gives Warning Beeps and also activates its Alarm O/P during the Egress Delay
- Good for door for the authorized people only. The keypad beeps and report alarm to a security system during the people are waiting for the door open.
- This is usually an "Emergency Exit". The door can be opened with the Keypad without triggering of the Buzzer and Alarm Output.

4 **--- Holding Contact Mode without Warning**
- Press and hold the Button. No warning or alarm is given during the Egress Delay.
- Good for the silent area. The people require to press & hold the button until the delay time reaches for the door open.

5 **--- Holding Contact Mode with Warning Beep**
- Press and hold the Button. The system gives Warning Beeps during Egress Delay.
- Good for the place required attention. The keypad beeps while the button is kept pressed during the people are waiting for the door open.

6 **--- Holding Contact Mode with Warning Beep & Alarm**
- Press and hold the Button. The system gives Warning Beeps and also activates its Alarm O/P during Egress Delay.
- This is usually an "Emergency Exit". The door can be opened with the Keypad without triggering of the Warning and Alarm.

EGRESS DELAY TIMER

0 **--- No Delay – (Default)**
Output 1 activates instantly (the door is released instantly) when the Egress Button is pressed.

1 – 9 9 **--- Egress Delay Timing**
Put any number of 1 to 99 into the box to enable the Egress Delay. The number is the time in second, which starts to count when the Egress Button is pressed. Output 1 activates (the door is released) when the delay time reaches.

NOTE:

1) **Momentary Contact** -- The Egress Delay starts to count when the egress button is momentarily pressed. Output 1 activates automatically (door is released) when the delay time reaches.
2) **Holding Contact** -- The user **MUST** hold the egress button in contact for the whole period of the Egress Delay time until Output 1 activates. If the egress button is released before the end of the Egress Delay, the timer will stop to count and reset.
3) The Egress Delay does not affect the operation of the User PINs/Cards for Output 1. The User PINs/Cards always give INSTANT action.

Examples: (please see the following page)

INTELLIGENT EGRESS BUTTON – AN UNIQUE FEATURE OF A CONTEMPORARY KEYPAD

Most of the keypads for access control are just for controlling of “Going In” from outside. It is not enough for today’s access control systems. In fact, controlling of “Going Out” is also very important in many public passage areas. They are not allowed to use locks or digital keypads for stopping of “Going Out” due to safety reasons. Such as hospitals, kindergartens, elderly homes, convenient stores, emergency exits etc.. The wardens, teachers, shopkeepers and the guards are always required to keep an eye on people to prevent unattended leaving, shoplifting, and illegal use of the emergency exits.

The Intelligent Egress Button can be programmed to do something to get the attention of the person on duty before the door is opened. The button offers programmable egress delay, delay with warning, holding button required for the delay, momentary button contact with warning for the delay and even gives alarm when a controlled door is opened.

Locations 90 and 91 below are the places for setting the desired functions for the Egress Button.

The functions programmed to the Egress Button do not affect the normal operation of the system with its keypad. For the safety consideration, the operation of the keypad with PIN, Code or Card is always in the first priority to give instant action to the output relay 1 for door strike.

It is **NOT** required to program the Egress Button with the special function in normal use. Just leave it on its default values.

WHERE AND WHY “GOING OUT” NEEDS ATTENTION

Examples for some areas may need an Intelligent Egress Button:

Hospital:
Some of the patients are not allowed to leave the ward without doctor’s permission. An egress button with exit delay and warning beeps will help the nurse or warden to get the attention to the door when the egress button is pressed. Further setting of the egress button with holding contact for the delay even gives higher level of security to a controlled door.

Kindergarten:
Young children are always active. Some of them may be willing to go out to explore their ways of playing. For safety reason, teachers have to watch all of them in the attended area. Leaving school alone without the companion of parents or teacher is dangerous to the young children. An egress button with delay and warning beeps will be helpful to prevent the children trying to go out without getting the attention of the teacher.

Elderly Home:
Elderly needs constant attention and care. Some old people have poor memory. They may forget the way to come back if they leave home alone. An egress button with delay and warning beep will easily get the attention of the warden before the door is open.

Convenient Store:
Most of the convenient stores have just only one or two shopkeepers on duty. They are usually the cashier. Shoplifting may easily happen while the shopkeeper is busily serving customers at the cashier desk. A holding contact egress button with delay and warning beeps may help to stop most of the shoplifting. As the thief knows that he is gotten attention by the shopkeeper before the door is open.

High Traffic Passage:
A short buffer time may be necessary for opening a door outward after pressing the egress button for those exits open to a high traffic passage. An egress button with short delay and warning beeps helps the user to pay attention to the people passing by to prevent hitting them when the door is pushed outward.

Emergency Exit:
Emergency Exit is not open to the public for daily use. It is for emergency case only. It is usually closed and watched by the security guards. The egress button of this keypad can be programmed to offer exit delay with warning beeps and even gives alarm output to trigger an alarm system when the door is forced to open or the door is open after the exit delay expired. It is an useful tool to get the attention of the person on duty.

4) Example 4 -- EM Card + Common User PIN :

i) Programming :

[1] [0] [4] [0] [0] [3] [Read Card] [#]
(a) (b) (c) (d) (e)

(a) The card is programmed for operating of the Output 1
(b) The operation is “EM Card + Common User PIN”
(c) Take ID number 003 in Group 1 to store the card, which is one of the IDs in 000-999
(d) Put the card close to the reader. One beep confirms the reading. (No need to key in a Common User PIN but there **MUST** be a Common User PIN already recorded in Location 03; (or 04, 05 if for O/P 2, O/P 3).
(e) Press # to store the “Card” into memory. Two-beep confirms a valid entry

ii) Operation : (while the system is back to operation mode)

[Read Card] [Common User PIN] [#]
(a) (b) (c)

(a) Put the EM card close to the reader. One-beep confirms the reading and 30 seconds waiting time is given for the entry of the Common User PIN, the Amber LED keeps flashing
(b) Key in the Common User PIN “1 3 5 7” (the number programmed in “Location 0 3” for Output 1 in the previous Example)
(c) Confirm it with the # key. Output 1 activates

5) Example 5 -- Delete an User PIN & / or EM Card (for O/P 1, 2 or 3) :

i) Delete An User PIN or A Lost EM Card

[1] [0] [5] [User ID] [#]
(a) (b) (c) (d)

(a) Key in the User Group that the User ID belongs to. “10” for the Group 1, “20” for the Group 2, and “30” for the Group 3
(b) Key in “5” that is the Command Code for making a deletion here
(c) Key in the User ID that stored the User PIN, the lost EM card or the EM Card+User PIN
(d) Press the # key. Two-beep confirms a valid entry and the PIN and/or Card in that User ID is cleared

ii) Delete an EM Card

[1] [0] [5] [Read Card] [#]
(a) (b) (c) (d)

(a) Key in the User Group that the EM Card belongs to. “1 0” for the Group 1, “2 0” for the Group 2, and “3 0” for the Group 3
(b) Key in “5” that is the Command Code for making a deletion here
(c) Put the EM card close to the reader. One-beep confirms the reading. Read the Card only also makes a valid deletion to the Card working with the Common User PIN or the Secondary User PIN
(d) Press the # key. Two-beep confirms a valid entry. The EM Card in that User ID is cleared. Key in the User ID is not required.

6) Example 6 – Clear The Whole Group of Users :

Whole group of users including the PINs and Cards can be cleared with the following command.

[1] [0] [0] [9] [9] [9] [#]
(a) (b) (c)

(a) The User Group 1 – “**10**” is selected to be cleared. “**20**” for Group 2 & “**30**” for Group 3
(b) Key in the Group Deletion Command, **0 9 9 9**
(c) Confirm the deletion with #. All the User PINs and Cards in the Group 1 are cleared. It takes few seconds to a minute to complete depending on the data stored.

7) Example 7 – Report A Duress While Using EM Card :

The Duress Codes are Prime User Codes in the system. In the “EM Card + Secondary User PIN” or “EM Card + Common User PIN” operation, they can be used to replace the “Secondary User PIN” or the “Common User PIN” to operate the specific output and report a duress alarm event. Programming is not required. The system has this function automatically while Duress Code exists.

Operation : (while the system is in the operation mode)

Read Card	Duress Code	#
(a)	(b)	(c)

(a) Put the EM card close to the reader. One-beep confirms the reading and 30 seconds waiting time is given for the entry of the Duress Code, the Amber LED keeps flashing

(b) Key in one of the Duress Codes for the specific output (the Code programmed in "Location 41, 42, or 43" for Output 1, 2 and 3 respectively)

(c) Confirm it with the # key. The specific Output activates in a normal way and the Duress Output also activates to report Duress Event to an alarm system.

NOTE: The Duress Event can not be reported if the operation mode is EM Card alone. It is required to key in the Duress Code directly if necessary.

VISITOR CODES (FOR OUTPUT 1 ONLY) (Location 40)

The Visitor Codes are the temporary user codes for operating of the **Output 1** (mainly for door strike in access control). They can be programmed as "**One Time Codes**" or "**Codes with Time Limit**". The Visitor Codes will be cleared automatically after use if they are one time codes, or, when the allowed time expires.

LOCATION	VISITOR ID	VALID PERIOD	VISITOR CODE	VALIDATION
4 0	0 1 – 5 0	0 0 or 0 1 – 9 9	4-8 DIGITS	#

VISITOR ID

50 Visitor IDs for storing the codes. They are represented by a Two-digit ID Number of 0 1 to 5 0.

0 9 9 9 = **Clear all the Visitor Codes from Location 40.** Please see the Programming example below for the details.

VALID PERIOD

The codes in this box MUST be two digits and they represent the time of the operation.

0 0 **--- One Time Code**

One Time Code has no time limit but it can only be used for ONCE. It is cleared by the system automatically after use.

0 1 – 9 9 **--- Time Limit in Hour(s)**

The Visitor Code can be set with the valid time limit of 1 Hour to 99 Hours with a two-digit number of 01 to 99. The visitor code is cleared by the system when the time limit reaches.

VISITOR CODES

- When a new Visitor Code is put in the same Code box, the old code is replaced.
- The Visitor Codes can be 4-8 digits for the Manual Mode code entry.
- The Visitor Codes MUST be in the same digit length with the Master Code for Auto Mode code entry.
- The Visitor Codes can not reset Duress Output.

NOTE: All Visitor Codes will be cleared after power down to prevent extension/confusion of their valid time limit.

EXAMPLES:

Example 1: Set a "One Time Visitor Code" with the number of "1 2 6 8" for the Output 1

4 0	0 1	0 0	1 2 6 8	#
(a)	(b)	(c)	(d)	(e)

(a) Visitor Code Programming, **(b)** The Visitor ID, **(c)** An One Time Code, **(d)** The Visitor Code, **(e)** Entry Confirmation

Example 2: Set a "Visitor Code" with the number of "1 3 7 8" that is valid for three hours for the Output 1

4 0	0 2	0 3	1 3 7 8	#
(a)	(b)	(c)	(d)	(e)

(a) Visitor Code Programming, **(b)** The Visitor ID, **(c)** Valid for 3 Hours, **(d)** The Visitor Code, **(e)** Entry Confirmation

STATUS LED FLASHING ON-OFF DURING STANDBY (Location 73)

LOCATION	FUNCTION MODES	VALIDATION
7 3	1 or 0	#

STANDBY FLASHING ON-OFF

Some people find the flashing light of the status LED (the amber LED) is annoying during the keypad is on standby, especially at the night time. The standby flashing can be ON-OFF with the setting here.

1 **--- Standby Flashing ON -- (Default)**

The Status LED gives Standby Flashing all the time during the keypad is on standby. It also gives all the light indications showing the operation status of the system.

0 **--- Standby Flashing OFF**

The Standby Flashing is disabled but it does not affect the system status indications. All the light indications from it are unchanged.

DOOR FORCED OPEN WARNING & TIMING (Location 80)

LOCATION	FUNCTION MODES	VALIDATION
8 0	0 or 1 – 9 9 9	#

DOOR FORCED OPEN WARNING ON-OFF & TIMING

The Door Forced Open Warning function requires a Door Position Sensing switch (usually a magnetic contact) to work with. Once a Timing Figure is put into the Function Mode box, the warning mode is enabled.

0 **--- Door Forced Open Warning OFF – (Default)**

1 – 9 9 9 **--- Door Forced Open Warning & Alarm ON & Timing**

The Timing Figure for the Warning can be 1-999 seconds. The keypad generates the door forced open warning beeps and activates the alarm output (Terminal 13) instantly if the door is forced to open without a valid User PIN/Card or pressing of the Egress Button. The beeps and alarm will last as long as the time set on the timer and it can be stopped at anytime with an User PIN/Card in Group 1 before the end of the time.

The Manner of The Door Forced Open Warning:

a) The door is forced to open (without using PIN/Card or Egress Button) – **Warning & Alarm**

b) The door is opened with PIN/Card – **No Warning or Alarm**

c) The door is opened with Egress Button – **No Warning or Alarm**

DOOR PROPPED-UP WARNING & THE DELAY TIME (Location 81)

LOCATION	FUNCTION MODES	VALIDATION
8 1	0 or 1 – 9 9 9	#

DOOR PROPPED-UP WARNING ON-OFF & TIMING

If somebody opened the door and it is left open longer than the allowable delay time, the keypad will generate door propped-up warning **until the door is re-closed**. There is warning beeps from the keypad only but does not activates the alarm output.

0 **--- Door Propped-up Warning OFF – (Default)**

1 – 9 9 9 **--- Door Propped-up Warning ON & The Delay Time**

The Delay Time can be 1 to 999 seconds. It is the time allows the door to open without starting of the warning.

USER PIN ENTRY MODE – Auto or Manual (Location 70)

LOCATION	ENTRY MODES	VALIDATION
7 0	1 or 2	#

USER PIN ENTRY MODES

Two modes 1 and 2 are available for User PIN entry options. The **EM Card is always in Auto Entry Mode** and is not affected by the selection here.

1 **--- Auto Entry Mode**

Auto Entry Mode requires no pressing of the # key following the User PIN for code checking.

In the Auto Entry Mode, the **User PINs MUST be set in the same digit length of the Master Code** (For example, if the Master Code is 5 digits, then all User PINs must be in 5 digits as well. All other User PINs not in 5 digits become invalid). When the number of digits reaches, the system will check the User PIN automatically. Good for high traffic access control.

2 **--- Manual Entry Mode – (Default)**

Manual Entry Mode always requires the # key following of the User PIN for code checking. The User PINs can be **4-8 digits arbitrary** and they are **NOT** required to be in the same digit length of the Master Code. Manual Entry increases the level of security in the code trial by the unauthorized people.

PACIFIER TONES ON-OFF SELECTION (Location 71)

LOCATION	FUNCTION MODES	VALIDATION
7 1	1 or 0	#

PACIFIER TONES ON-OFF MODES

The Pacifier Tone is the Beep Tones from the keypad, which include the tones of Successful Key entry (1 beep), the Output Operation Announcer (2 beeps or 1 long beep) and the Unsuccessful User Code/ Card entry (5 beeps).

NOTE :

The beeps for the Warning and the Power-up Delay do not belong to pacifier tones and can not be set to OFF.

1 **--- Pacifier Tone ON – (Default)**

All the Pacifier Tones available from the keypad are enabled. They are the response tones indicating the operation status of the keypad after the Card/User Code is entered.

0 **--- Pacifier Tone OFF**

All the Pacifier Tones are OFF. Good for place needs for a silent environment.

OUTPUT OPERATION ANNOUNCER (Location 72)

LOCATION	FUNCTION MODES	VALIDATION
7 2	1 or 0	#

OUTPUT OPERATION ANNOUNCER

The announcer gives notification beep to the users and the visitors on the operation status of the outputs. There are two notification modes available for the selection.The notification is also OFF while the Pacifier Tone OFF mode in the Location 71 is selected.

1 **--- 1 Second Long Notification -- (Default)**

1 second notification beep is given when the output relay is activated with a valid Card/Code or Egress Button. It is prepared to notify the person outside the door when the lock is released and the door can be opened. It is good for the door lock device gives no sound when it activates, such as a magnetic lock.

0 **--- 2 Short Beeps Notification**

2 short beeps notification is given when the output is activated with a valid Card/Code.

Example 3: Delete a "Visitor Code" from Vistor ID 0 2 in the memory

4 0 (a) 0 2 (b) # (c)

(a) Visitor Code Programming, **(b)** The Visitor ID, **(c)** Delete Confirmation

Example 4: Clear all "Visitor Codes" from Location 4 0

4 0 (a) 0 9 9 9 (b) # (c)

(a) Visitor Code Location, **(b)** The Deletion Command Code, **(c)** Confirmation, all Visitor Codes are cleared

DURESS CODES (FOR OUTPUTS 1, 2 & 3) (Location 41, 42 & 43)

The Duress Codes are prepared for those **Important Persons** in case of **DURESS** while he operates the access control keypad. The duress code operates like a normal User PIN for Output 1, 2 or 3, and at the same time activates the Duress Output without any indication. The user may use it to report an emergency and ask for help silently when he is forced to operate the keypad if the Duress Output is connected with a security system.

NOTE: The Duress Codes are always valid. They are not governed by any inhibit or lock-out function in the system.

LOCATIONS	CODE ID	DURESS CODE	VALIDATION
4 1 – 4 3	0 1 – 5 0	4–8 DIGITS	#

OUTPUT LOCATIONS

4 1 **– Duress Codes for Output 1**

4 2 **– Duress Codes for Output 2**

4 3 **– Duress Codes for Output 3**

DURESS CODE IDs

ID 0 1 – 5 0 **50 Duress Codes Are Allowed for The Output 1**

ID 0 1 – 1 0 **10 Duress Codes Are Allowed for The Output 2**

ID 0 1 – 1 0 **10 Duress Codes Are Allowed for The Output 3**

0 9 9 9 = **Clear all the Duress Codes from the selected Location group.**
Please see the programming example below for the details.

THE DURESS CODES

50, 10 and 10 Duress Codes can be programmed for Output 1, 2 and 3 respectively. They are stored in their two-digit Code ID box. When a new Code is put into the same Code ID box, the old code is replaced.

- The Duress Codes are 4-8 digits for Manual Mode code entry.
- The Duress Codes MUST be in the same digit length with the Master Code for Auto Mode code entry.
- Always set a Duress Code that is easy to remember in **Panic Situation**. Only one number different from the daily used User PIN is highly recommended.

  Example: User PIN is **1 3 6 9**, then **3 3 6 9** or **1 3 6 0** might be a good choice for the Duress Code.
- The **Duress Code** can also be used to **replace the Secondary User PIN or Common User PIN** in Card reading for the Duress reporting.

EXAMPLES:

Example 1: Set a "Duress Code" with the number of "3 3 6 9" for Output 1

4 1 (a) 0 1 (b) 3 3 6 9 (c) # (d)

(a) Duress Code Programming for Output 1, **(b)** Duress Code ID, **(c)** The Duress Code, **(e)** Entry Confirmation

Example 2: Set a “Duress Code” with the number of “2 3 9 8 0” for Output 2

4 2 (a) 0 1 (b) 2 3 9 8 0 (c) # (d)

(a) Duress Code Programming for Output 2, **(b)** Duress Code ID, **(c)** The Duress Code, **(e)** Entry Confirmation

Example 3: Delete an Output 1 “Duress Code” from Duress Code ID 0 1 in the memory

4 1 (a) 0 1 (b) # (c)

(a) Duress Code Programming for Output 1, **(b)** The Duress Code ID, **(c)** Delete Confirmation

Example 4: Clear The Whole Group of Duress Codes from Location 4 1 :

4 1 (a) 0 9 9 9 (b) # (c)

(a) Group Location 4 1, **(b)** The Group Deletion Command, **(c)** Confirmation, all Duress Codes in Location 4 1 are cleared.

THE OPERATION AND FUNCTION OF THE DURESS CODE

The Duress Code(s) has double actions when it is keyed in. It activates the Duress Output (for duress alarm) and at the same time activates the specific Relay Output 1, 2 or 3 just like a normal User PIN. The Duress Code always activates its Relay Output in its group, but, does not de-activate (stop) the Duress Output. **ONLY a normal User PIN or Card in anyone of the user groups, or a Super User PIN** can reset (de-activate) the Duress Output.

For Example:

Key in The Duress Code 3 3 6 9 of the Group 1 (for Output 1) To Command The Duress Function :

3 3 6 9 # ----- Duress Output activates (switches to (–) ground) & Output 1 activates.

Key in The Duress Code 3 3 6 9 in Group 1 (for Output 1) Again :

3 3 6 9 # ----- Duress Output keeps activating and no change in its state (keeps to (–) ground) & Output 1 activates again.

Key in A Normal User PIN 1 3 6 9 in Group 1 (for Output 1):

1 3 6 9 # ----- Duress Output resets (back to OFF state) but has no function on Output 1.

Report Duress in EM Card Operation

The Duress Codes are Prime User Codes in the system. In the “**EM Card + Secondary User PIN**” or “**EM Card + Common User PIN**” operation, they can be used to replace the “Secondary User PIN” or the “Common User PIN” to operate the specific output and report a duress alarm event. Programming is not required. The system has the function automatically while Duress Code exists.

Operation : Taking Duress Code 3 3 6 9 in Group 1 for Output 1 As Example

Read Card (a) 3 3 6 9 (b) # (c)

a) Put the EM card close to the reader. One-beep confirms the reading and 30 seconds waiting time is given for the entry of the Duress Code, the Amber LED keeps flashing

b) Key in the Duress Codes 3 3 6 9 for operating the Output 1

c) Confirm it with the # key. Output 1 activates in a normal way and the Duress Output also activates to report Duress Event to an alarm system if connected.

NOTE: Duress Event can not be reported in the operation of only EM Card alone.

CONFIGURATION OF THE OUTPUT MODES OF OUTPUT 1, 2 AND 3 (Locations 51, 52 & 53)

The three relay outputs of this keypad are programmable for Start/Stop or Timing modes. Apart from the door access control, alarm arm-disarm control, they are also **universal timers for automatic operators in industry** with their 99,999 seconds (over 24 hours) programmable timer.

LOCATIONS: 5 1 – 5 3 | OUTPUT MODE & TIME: 0 or 1 – 9 9 9 9 9 | VALIDATION: #

OUTPUT LOCATIONS

5 1 **-- Location for Output 1**

5 2 **-- Location for Output 2**

5 3 **-- Location for Output 3**

OUTPUT MODE & TIMING

0 **– Start /Stop Mode (Toggle)**

The number 0 sets the output to the **Start / Stop mode**. The output **Starts** when an User PIN and/ or Card is entered/read; the output **Stops** when an User PIN and/or Card is entered/read again.

1 – 9 9 9 9 9 **Seconds Momentary --- (Default -- Momentary 5 Seconds)**

The output can be set in **Momentary Mode** with the time of 1 second to 99,999 seconds. The output will reset automatically when the time expires OR it can be **RESET manually at anytime with the Super User Code** that operates the desired output before the end of the time.

Example : Reset Output 1 -- SUPER USER CODE # 1 ---------- Output 1 resets

Reset Output 2 -- SUPER USER CODE # 2 ---------- Output 2 resets

Reset Output 3 -- SUPER USER CODE # 3 ---------- Output 3 resets

PERSONAL SAFETY AND SYSTEM LOCK-OUT (Location 60)

LOCATION: 6 0 | LOCK-OUT MODES: 1 to 2 Digits | VALIDATION: #

SAFETY & LOCK-OUT OPTIONS

The Options are represented by their Mode Numbers in programming. They are described below:

1 **--- After 10 successive false Card/User Code trials, the keypad locks during 60 seconds. -- (Default)**

2 --- After 10 successive false Card/User Code trials, activates the Duress output to switch to (–) ground.The Duress Output can be released with any user PIN or Card in the User Group 1 or Super User PIN.

5 – 1 0 --- Selection of after 5 to 10 successive Card/User Code trials, the keypad locks during 15 minutes. The keypad can be reset to release the lock-out with the “Super User Code” in the following way.

Example : Release the lock-out -- SUPER USER CODE # 9

0 0 --- Disappearance of all the above lock-out securities.